Single Cartridge Filter Vessels



SCV Series Vessels

High Flow / High Viscosity Filtration

Flows to 200 GPM (756 lpm), 150 PSI (10 Bar)
Port Sizes 1" to 3" NPT or Flanged

Behringer SCV Series single cartridge vessels are the best choice for high efficiency filtration in applications where flow rates or viscosities are extreme. The welded construction is available in carbon steel, 304L, or 316L stainless steel. The lid is secured using three swing bolts with eyenuts, one of which is captive to allow a hinged opening of the lid without complete removal of the eyenuts. The housing is available in nominal 18 and 36 inch lengths, for utilizing industry standard 6x18 and 6x36 elements. For even greater dirt-holding capacities, the housing can be supplied with internal support to use Behringer's BE106/BE107 coreless elements. Operating pressures can be accommodated up to 150 PSI at 300 degrees F.

Specifications

Materials of Construction

Filter Vessel Material:

C	Carbon steel (painted)
T	304L stainless steel (bead blast satin finish)
X	316L stainless steel (bead blast satin finish)

Filter Elements:

BE101	Industry standard 6x18, 6x36 element
BE106	Coreless element with 25 psid bypass
BE107	Coreless element with 45 psid bypass

Seals:

NBR (standard), FPM, EPDM, Teflon encapsulated Viton

Porting Arrangements

Connections:

NPT(F) thread or ANSI/ASME B16.5 class 150 flange

NPT Sizes Available:	1", 1-1/2", 2", 3"
Flange Sizes Available:	1", 1-1/2", 2", 3"

Additional Ports:

Gauge ports (2x):	1/4" NPT(F), plugged
Drain ports (2x):	3/4" NPT(F), plugged
Lid vent port:	1/4" NPT(F), plugged

Recommended Operating Conditions

Type:

Inline single cartridge filter vessel

Nominal Flow Rate:

75 GPM max vessel flow (18" length)
150 GPM max vessel flow (36" length)

Max Temperature:

300 °F (149 °C) dependent on seal materials

Max Working Pressure:

150 PSI (10 bar)

Recommended Change-out:

22 psid (1.5 bar) / 40 psid (2.8 bar)

Port Configurations

The standard port configuration is inline inlet and outlet. Optional porting available for a higher inlet / lower opposite side outlet, or same side inlet and outlet. These optional porting configurations are non-standard and may require additional lead time. Additional options include a rounded vessel bottom with bottom outlet, mounted on fixed legs. Consult Behringer for options.

Filter Sizing and Selection

Vessel Sizing:

Sizing cartridge filters is typically done so that initial (clean) pressure drop of the filter vessel and any installed media does not exceed 2-3 psid. For assemblies utilizing elements with 45 psi bypasses, initial pressure drop up to 5-6 psid are acceptable. To aid in selection, please refer to the instructions and charts contained on this page.

Calculate the complete filter assembly's clean (initial) pressure drop (ΔP) by adding the ΔP of the filter housing and the ΔP of the filter element from the respective curves.

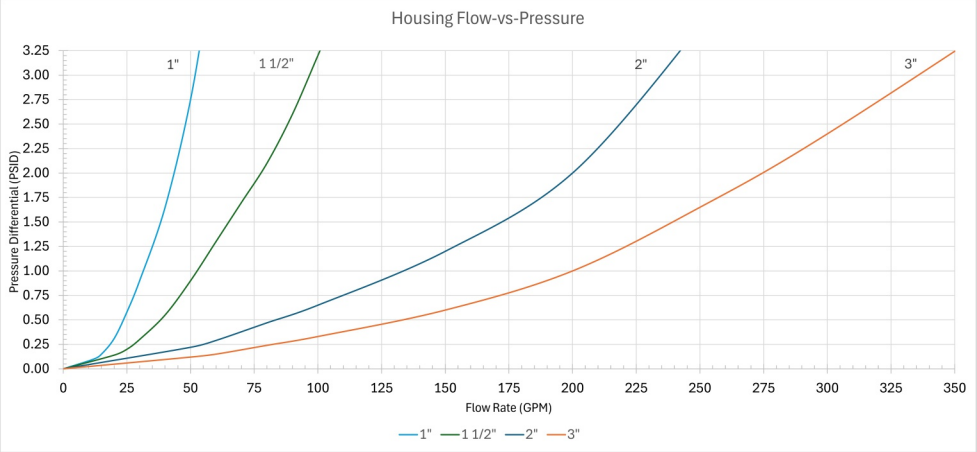

Pressure drop curves are based on fluid with viscosity of 150 SUS (32 cSt), and a specific gravity (SG) of 0.9. ΔP across the filter is proportionally related to viscosity and specific gravity. The formula for calculating different pressure drops of different viscosities is as follows: **NewΔP =(ΔP Housing +ΔP Element) x (Viscosity/150) x (SG/0.9)**

Filter Element Sizing:

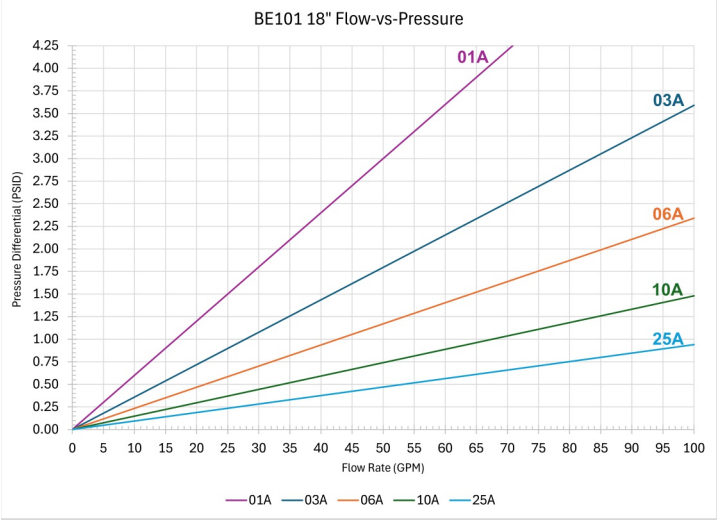

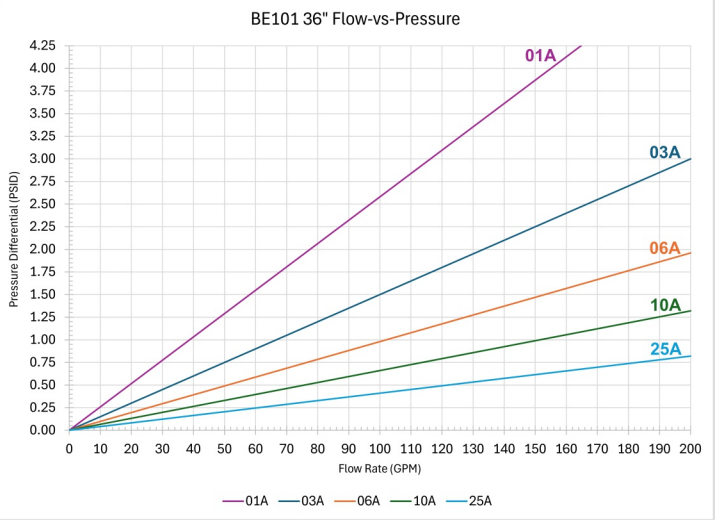

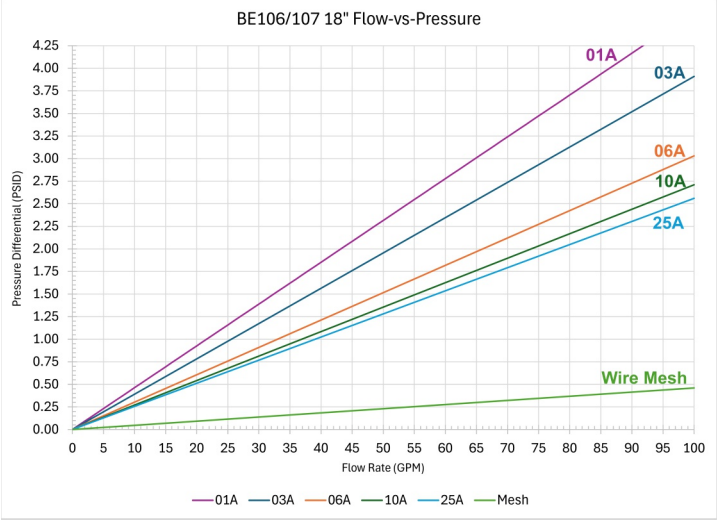

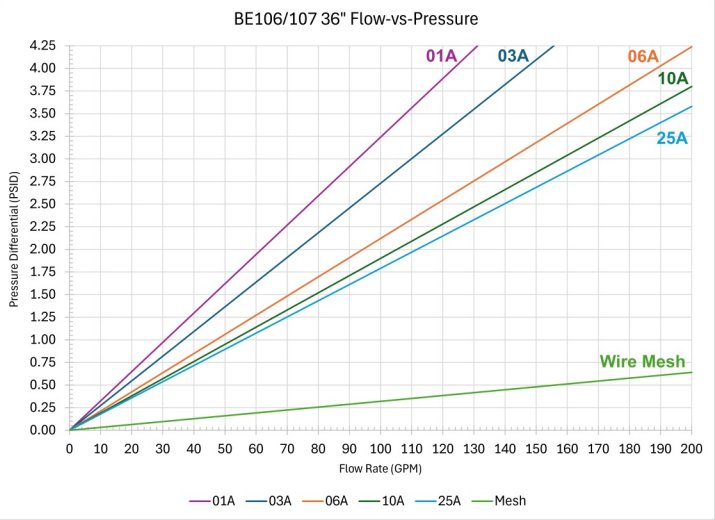

Dimensions

18" Housing with Threaded Ports:

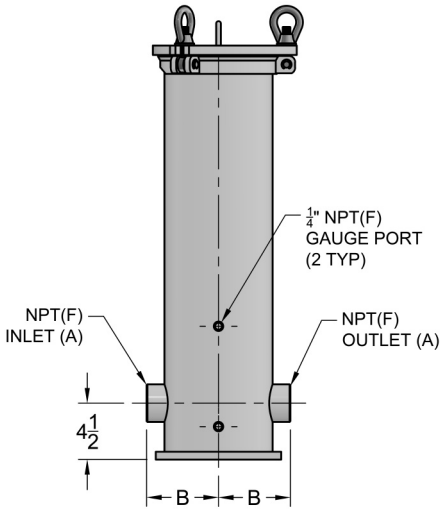

FRONT VIEW

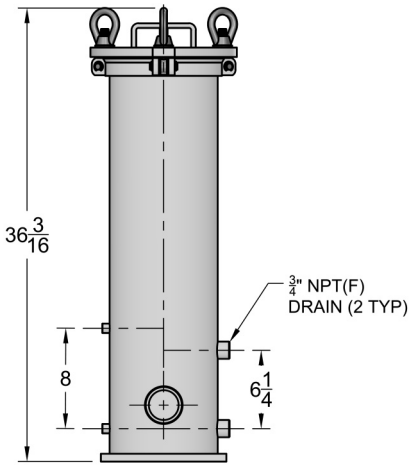

SIDE VIEW

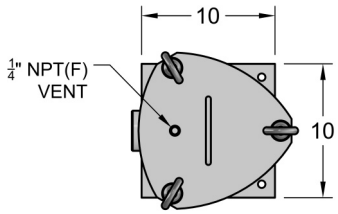

TOP VIEW

Vessel Size	Connection Size (A)	B
18" Threaded	1" NPT(F)	5 3/8"
	1-1/2" NPT(F)	5 11/16"
	2" NPT(F)	5 3/4"
	3" NPT(F)	5 7/8"

18" Housing with Flanged Ports:

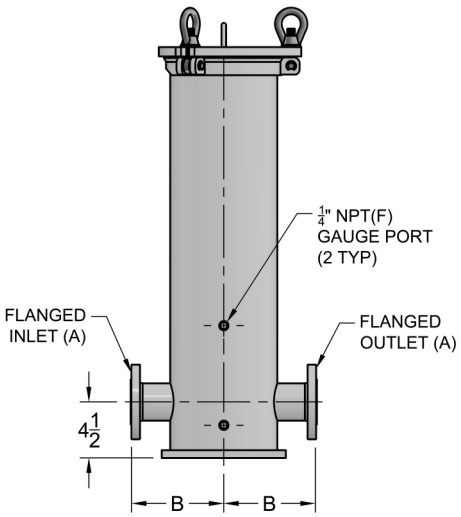

FRONT VIEW

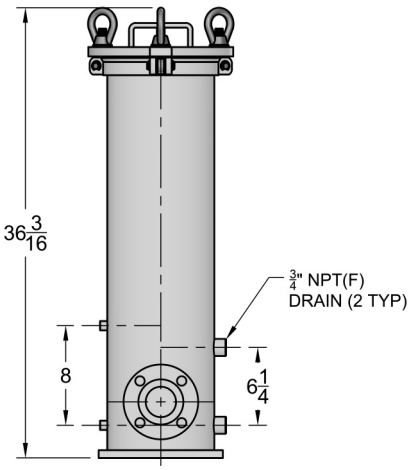

SIDE VIEW

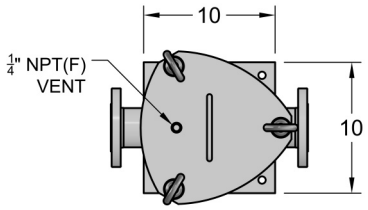

TOP VIEW

Vessel Size	Connection Size (A)	B
18" Flanged	1" Flange	7 1/2"
	1-1/2" Flange	7 7/16"
	2" Flange	7 7/16"
	3" Flange	7 3/16"

Dimensions

36" Housing with Threaded Ports:

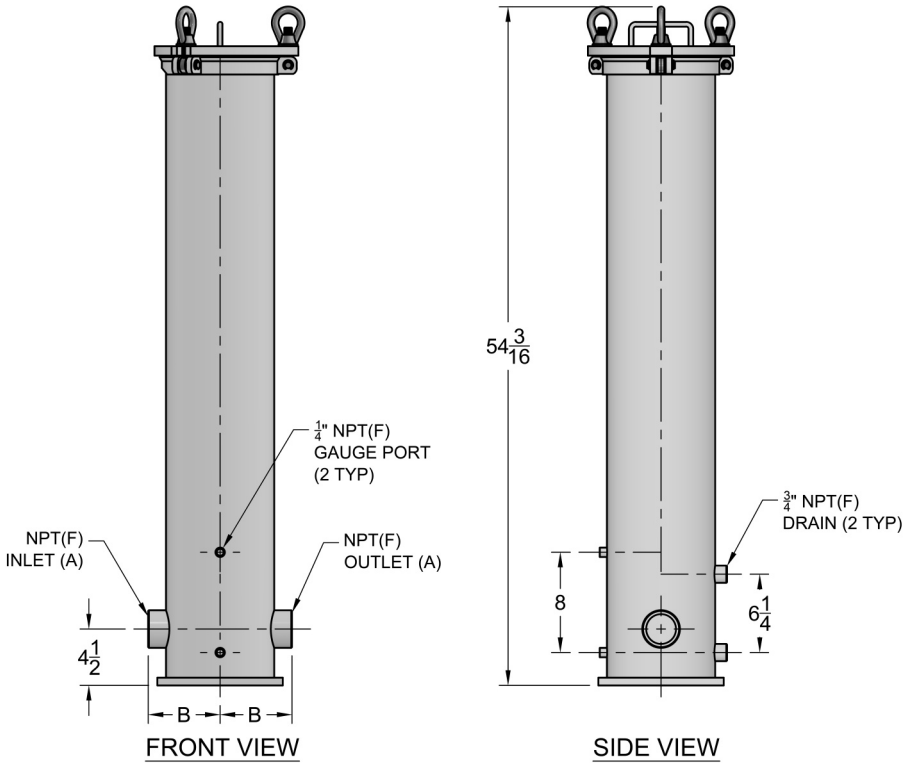

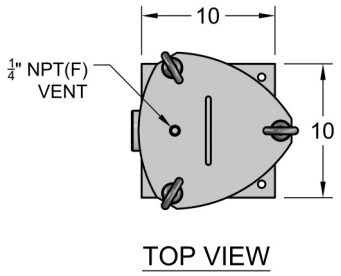

Vessel Size	Connection Size (A)	B
36" Threaded	1" NPT(F)	5 3/8"
	1-1/2" NPT(F)	5 11/16"
	2" NPT(F)	5 3/4"
	3" NPT(F)	5 7/8"

36" Housing with Flanged Ports:

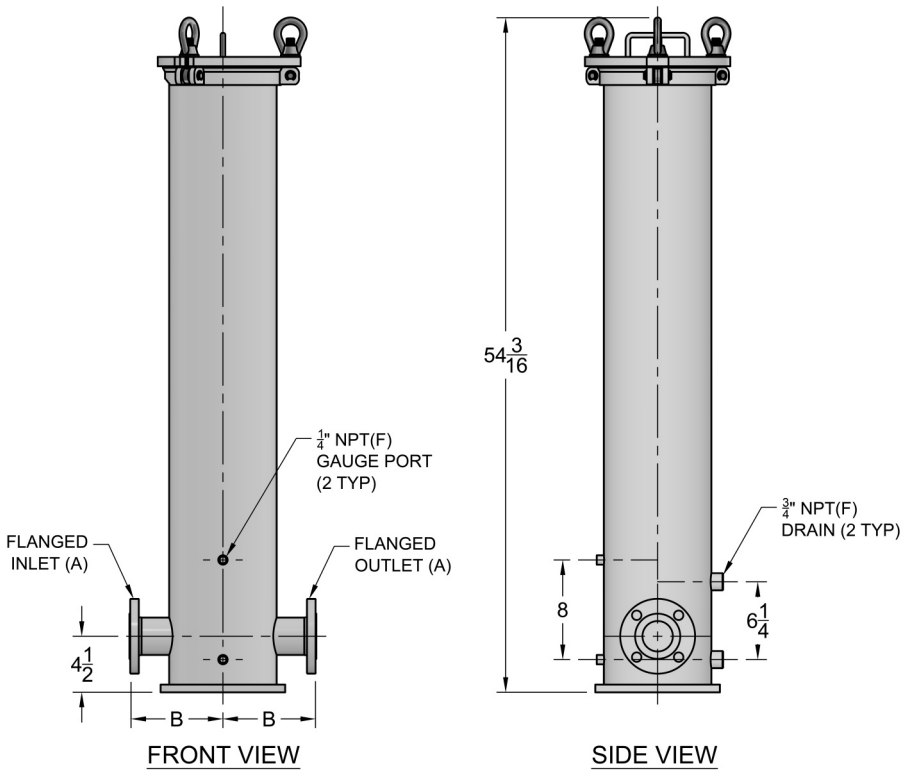

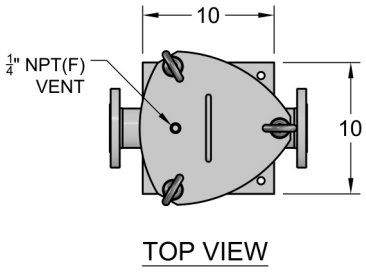

Vessel Size	Connection Size (A)	B
36" Flanged	1" Flange	7 1/2"
	1-1/2" Flange	7 7/16"
	2" Flange	7 7/16"
	3" Flange	7 3/16"

How to Order

Vessel Ordering Code:

SCV Table 1 ___ Table 2 ___ Table 3 ___ Table 4 ___ Table 5 ___ Table 6 ___ Table 7 ___ Table 8 ___ Table 9 - ___

Material	Table 1
blank	Carbon Steel
T	304L Stainless
X	316L Stainless

Length	Table 2
18	18" Elements
36	36" Elements

Ports	Table 3
T	NPT Female
F	ANSI Flange
C	SAE C.61 Flange

Size	Table 4
6	1"
8	1-1/2"
9	2"
11	3"

Outlet	Table 5
I	Inline
A	Bottom
B	Opposite
C	Same Side

Seals	Table 6
N	NBR
E	EPR
V	FPM
T	Teflon Encapsulated Viton

Base	Table7
P	Flat Plate
L	Fixed Legs

Element	Table 8
1	BE101 (non-bypass)
7	BE106/107 (coreless)

Specials	Table 9
Special options other than standard (see below)	

*Options in red color are non-standard options. Consult Behringer for details

Filter Element Ordering Code:

BE10 Table 1 __ / Table 2 __ - Table 3 __ Table 4 __

Style	Table 1
1	BE101 (non-bypass)
6	BE106 (25 psi bypass)
7	BE107 (45 psi bypass)

Length	Table 2
18	18" Elements
36	36" Elements

Micron / Media	Table 3
01A	$B2.5_{[c]}$=1000 (B1=200)
03A	$B5_{[c]}$=1000 (B3=200)
06A	$B7_{[c]}$=1000 (B6=200)
10A	$B12_{[c]}$=1000 (B12=200)
25A	$B22_{[c]}$=1000 (B25=200)
10N	10 Nominal Cellulose
25N	25 Nominal Cellulose
74W	74 Nominal Wire Mesh
149W	149 Nominal Wire Mesh

Seals	Table 4
Blank	NBR
E	EPR
V	FPM

Typical / Common Configurations:

SCV18T9INP1	Carbon steel vessel, 18" element (718 style), 2" NPT connections, no bypass, NBR Seals
SCV36T9INP1	Carbon steel vessel, 36" element (736 style), 2" NPT connections, no bypass, NBR Seals
SCV18T9INP7	Carbon steel vessel, 18" element (Coreless), 2" NPT connections, bypass (in element), NBR Seals
SCV36T9INP7	Carbon steel vessel, 36" element (Coreless), 2" NPT connections, bypass (in element), NBR Seals